Malmo Retangular Garden Sofa Set

932573

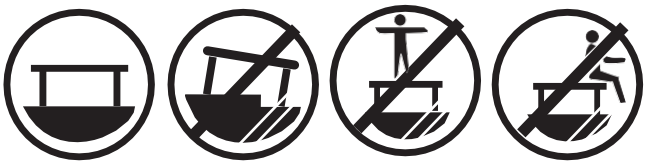

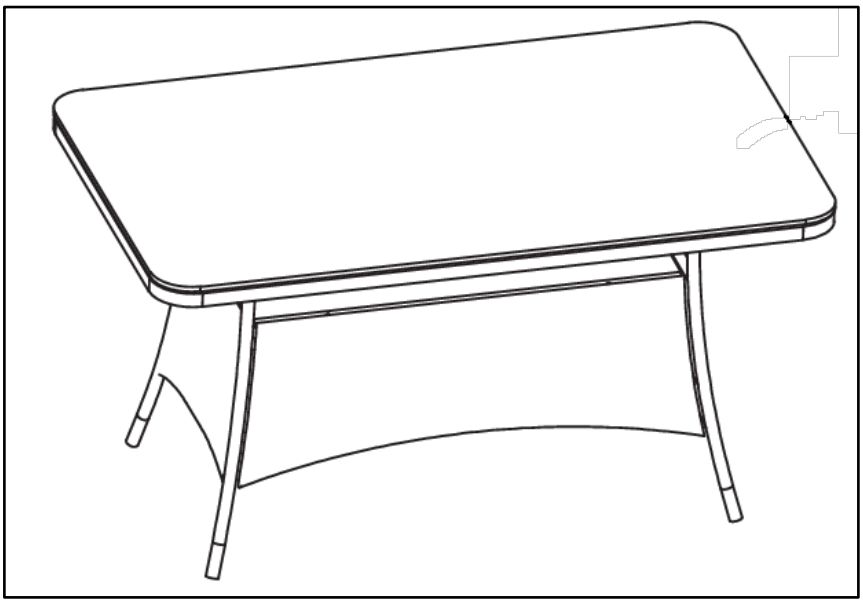

BEFORE YOU START

- Retain these instructions for future reference.
- When you are ready to start, make sure that you have plenty of space and a clean, dry area for assembly.
- Unwrap all packaging materials and place the components on top of the carton box or on a clean floor to prevent it from scratching.
- Check the pack and make sure you have all the parts listed.
- Ensure that this product is fully assembled as illustrated before use.

WARNINGS

- Do not sit or stand on the table.
- Do not tighten the screws until fully assembled.
- Do not overtighten screws or bolts.
- Keep small parts out of reach of children.
- Do not use this product if parts are missing, damaged or worn.
- This product is for domestic use only.
- This product should only be used on firm, level ground.
- Periodically, inspect and tighten all fixings to ensure the product remains secure.

ASSEMBLY INSTRUCTIONS

PARTS SUPPLIED

REF	DESCRIPTION	ILLUSTRATION	QUANTITY
A	Table Top	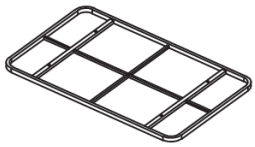	1
B	Leg B	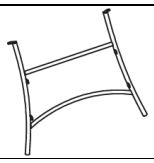	2
C	Leg C	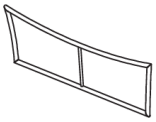	2
D	Glass		1
E	Screws		12
F	Washer		16
G	Screws		4
H	Shelf	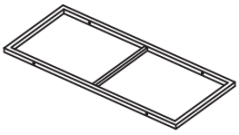	1
I	Allen key		1

ASSEMBLY IMAGES & STEPS

Step 1

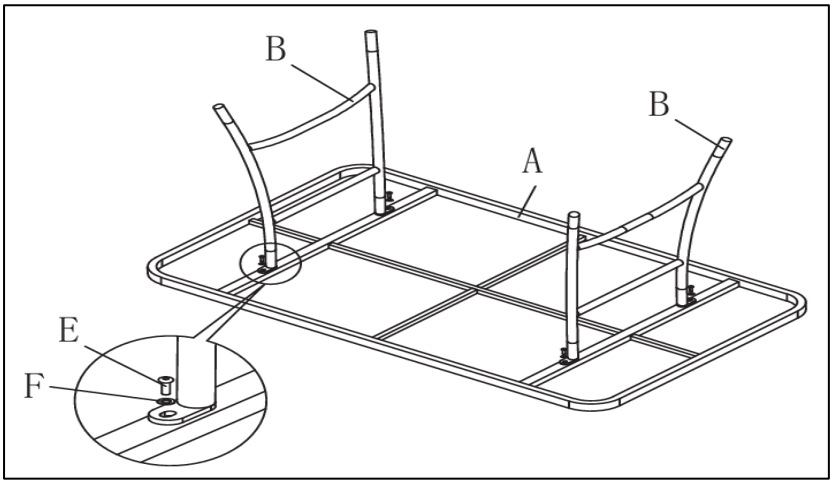

Step 2

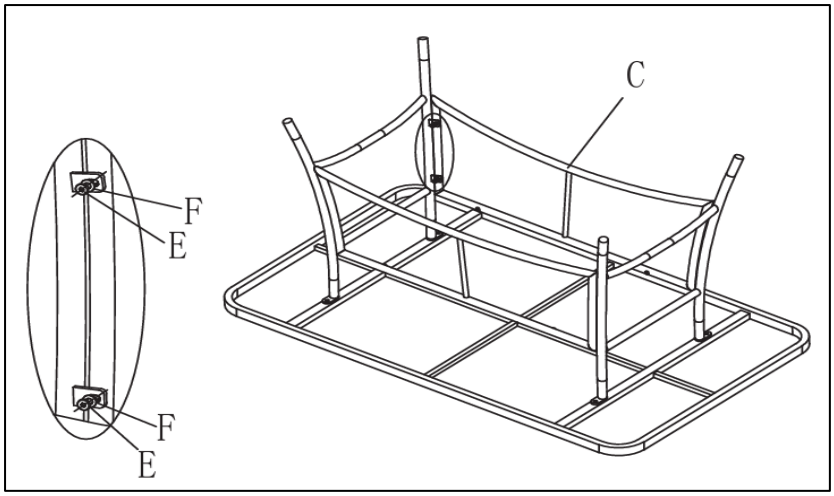

Step 3

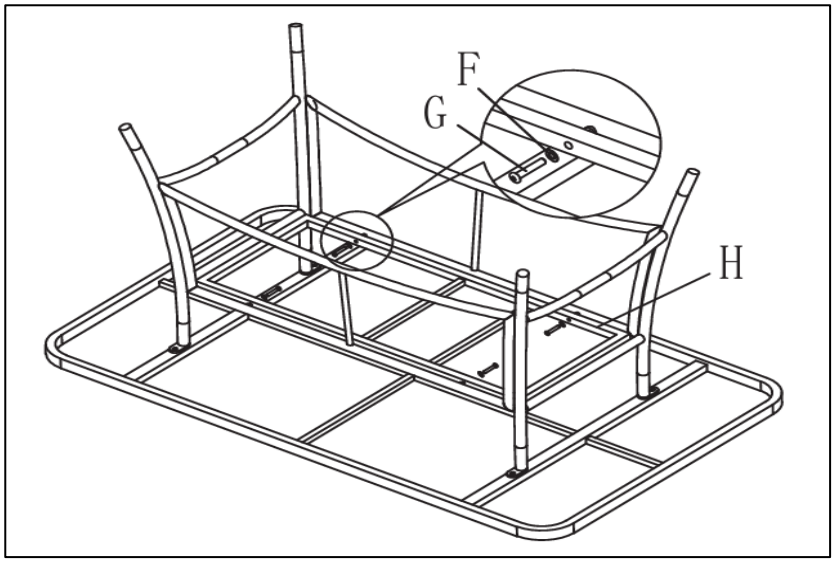

Step 4

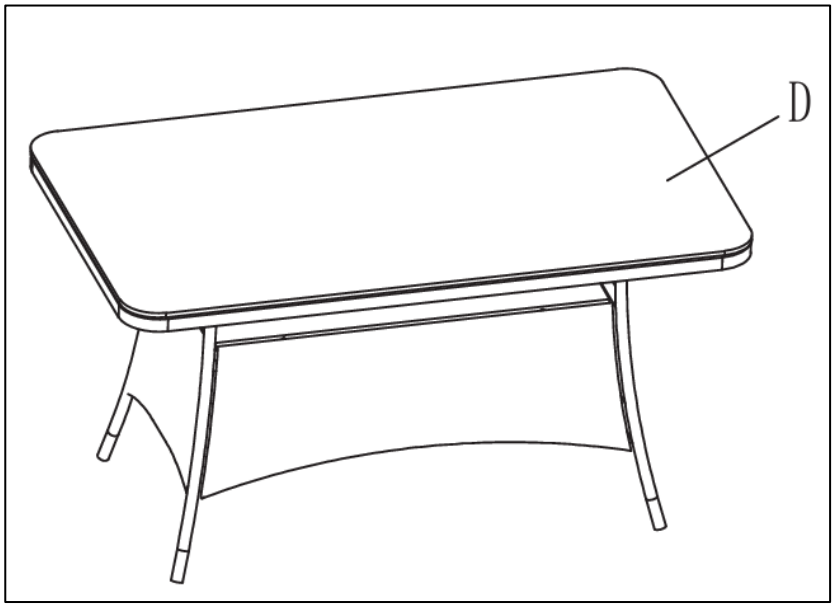

CARE INSTRUCTIONS

- To clean, wipe with a sponge and warm soapy water, then wipe with a dry, clean cloth. Do not use solvent-based cleaners or detergents as they can bleach or damage the product.
- Never use a pressure hose or washer to clean the product. Never use scourers, abrasives, or chemical cleaners.
- Do not cut directly on the surface. Always use a cutting surface to avoid damaging the surface.
- Do not put boiling or hot items directly onto the glass as it will cause the glass to shatter.
- If any liquid spills onto the rattan, clean it immediately with a damp cloth, and always refer to the care label.
- After rain or snowfall, wipe off excess water or snow, especially from flat surfaces. Allow air to ventilate to avoid moisture and mould.
- We recommend the use of a furniture cover when product not in use.
- To help maintain its appearance and avoid scratches, never place sharp pointed objects directly onto the surface.
- Due to the rattan being hand-woven, the weave may contain some colour and finishing variations. This is normal.
- In high temperatures, with direct sunlight, the glass/glass objects placed on top of the table, may concentrate the sun's rays and melt/damage the rattan.
- To prevent this, consider placing your rattan furniture in a shaded area or using a protective covering when it’s not in use, or use a protective mat when in use.
- Store the furniture in a cool, dry place. Ensure that the furniture is clean and dry before putting into storage. Do NOT put the product in a plastic or other non-permeable material as this creates moisture.
- Never drag furniture when moving it. Always lift it.
- Periodically check all fixings to ensure none have come loose and re-tighten when necessary.
- Never tilt the furniture. Ensure the furniture is always placed firmly on a solid, level surface.
- Please keep away from sources of extreme heat and naked flames.
- The warranty does not cover accidental damage/neglect or general wear and tear.

CONTACT

CUSTOMER SERVICES - EMAIL: CUSTOMER.SERVICE@DOBBIES.COM. TELEPHONE NUMBER: 0131 561 6406 OR CONTACT YOUR LOCAL STORE.
DOBBIES GARDEN CENTRES LTD, MELVILLE NURSERY, LASSWADE, MIDLOTHIAN, EH18 1AZ

Sofa seat

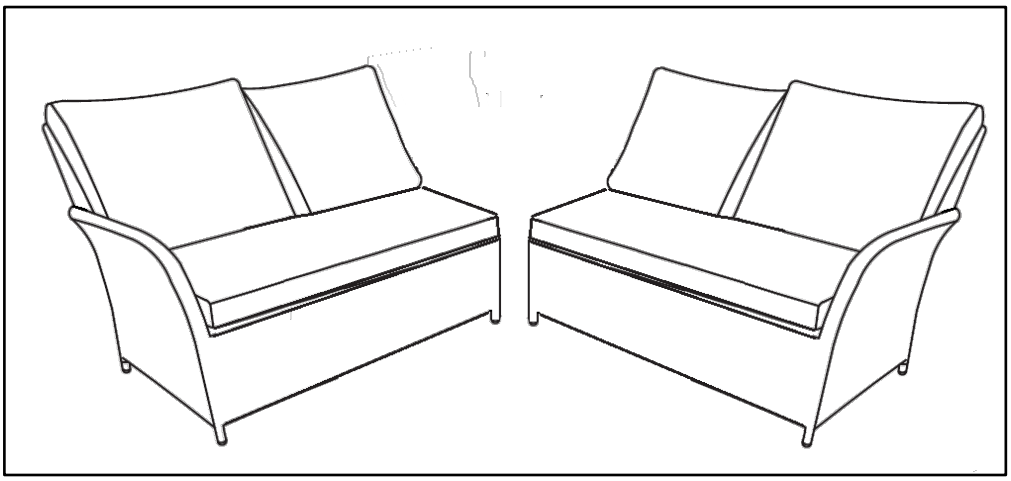

BEFORE YOU START

- Retain these instructions for future reference.
- When you are ready to start, make sure that you have plenty of space and a clean, dry area for assembly.
- Unwrap all packaging materials and place the components on top of the carton box or on a clean floor to prevent it from scratching.
- Check the pack and make sure you have all the parts listed.
- Ensure that this product is fully assembled as illustrated before use.

WARNINGS

- Do not stand on the sofa.
- This product is intended for a maximum weight of 110kg per seat. Do not exceed this weight.
- Keep small parts out of reach of children.
- Do not use this product if parts are missing, damaged or worn.
- This product is for domestic use only.
- This product should only be used on firm, level ground.

ASSEMBLY INSTRUCTIONS

PARTS SUPPLIED

REF	DESCRIPTION	ILLUSTRATION	QUANTITY	Assembly required
1	Left hand 2 seat sofa	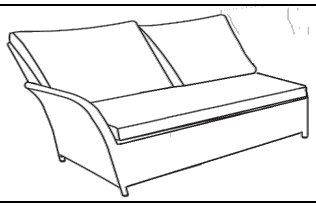	1	No
2	Right hand 2 seat sofa	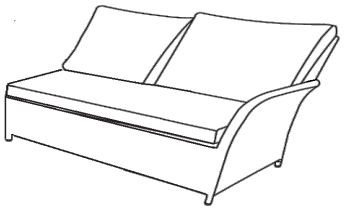	1	No

ASSEMBLY IMAGES & STEPS

Step 1

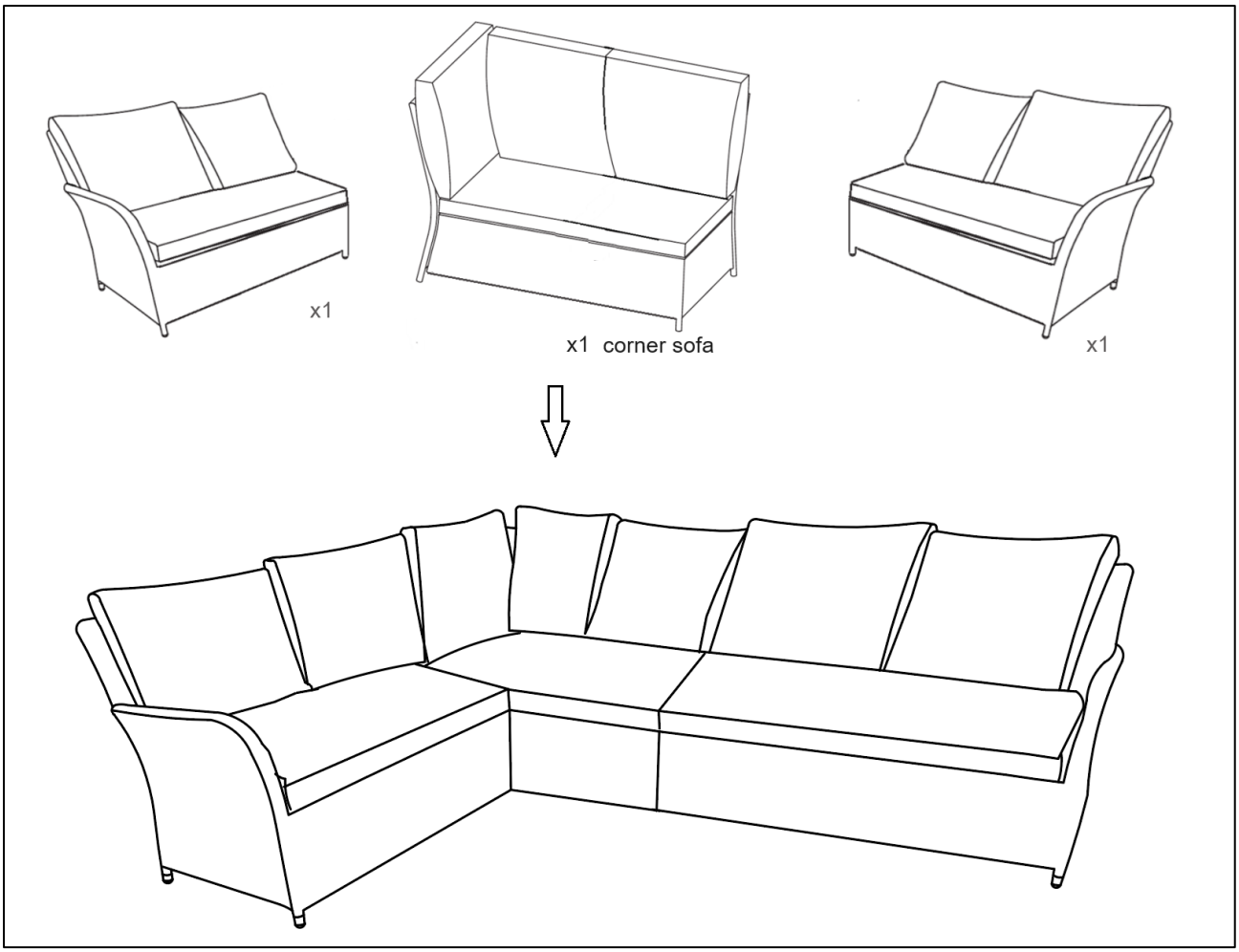

CARE INSTRUCTIONS

- To clean, wipe with a sponge and warm soapy water, then wipe with a dry, clean cloth. Do not use solvent-based cleaners or detergents as they can bleach or damage the product.
- Never use a pressure hose or washer to clean the product. Never use scourers, abrasives, or chemical cleaners.
- Please note, the cushions are **not** waterproof and **should not** be left out in the rain. Please store the cushions in a cool, dry place when not in use.
- If any liquid spills onto the rattan, clean it immediately with a damp cloth, and always refer to the care label.
- After rain or snowfall, wipe off excess water or snow, especially from flat surfaces. Allow air to ventilate to avoid moisture and mould.
- We recommend the use of a furniture cover when product not in use.
- To help maintain its appearance and avoid scratches, never place sharp pointed objects directly onto the surface.
- Due to the rattan being hand-woven, the weave may contain some colour and finishing variations. This is normal.
- To avoid damage to the rattan, be sure to pick the furniture up only by the frame, and never by the woven panels, to avoid damage/distortion to the product.
- Store the furniture in a cool, dry place. Ensure that the furniture is clean and dry before putting into storage. Do NOT put the product in a plastic or other non-permeable material as this creates moisture.
- Never drag furniture when moving it. Always lift it.
- Periodically check all fixings to ensure none have come loose and re-tighten when necessary.
- Never tilt the furniture. Ensure the furniture is always placed firmly on a solid, level surface.
- Please keep away from sources of extreme heat and naked flames.
- The warranty does not cover accidental damage/neglect or general wear and tear.

CONTACT

CUSTOMER SERVICES - EMAIL: CUSTOMER.SERVICE@DOBBIES.COM. TELEPHONE NUMBER: 0131 561 6406 OR CONTACT YOUR LOCAL STORE.
DOBBIES GARDEN CENTRES LTD, MELVILLE NURSERY, LASSWADE, MIDLOTHIAN, EH18 1AZ

MALMO RECTANGULAR CORNER SOFA & BENCH

931989

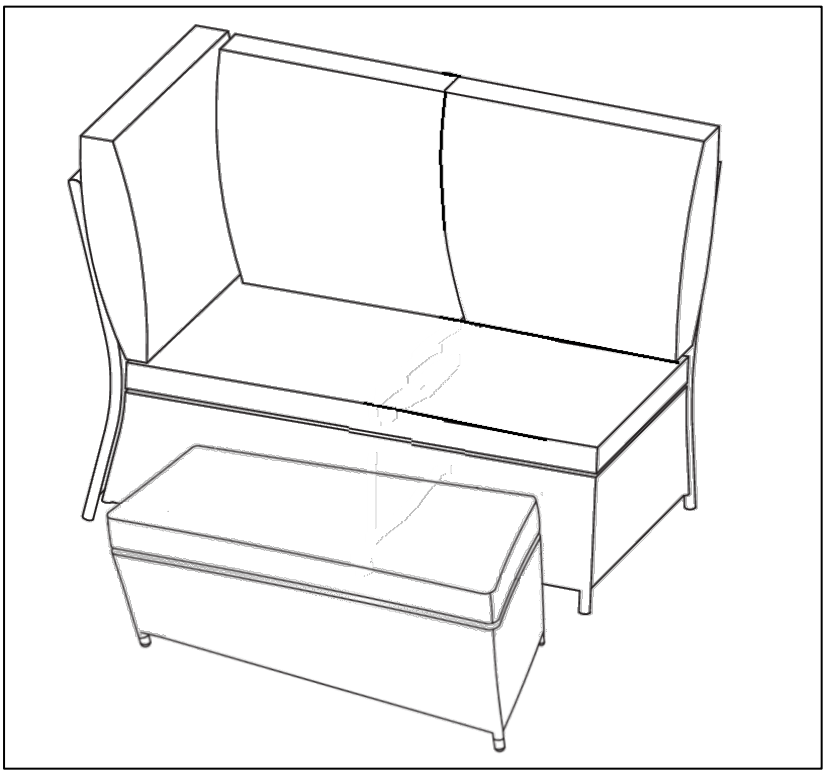

BEFORE YOU START

- Retain these instructions for future reference.
- When you are ready to start, make sure that you have plenty of space and a clean, dry area for assembly.
- Unwrap all packaging materials and place the components on top of the carton box or on a clean floor to prevent it from scratching.
- Check the pack and make sure you have all the parts listed.
- Ensure that this product is fully assembled as illustrated before use.

WARNINGS

- Do not stand on sofa or bench.
- This product is intended for a maximum weight of 110kg per seat. Do not exceed this weight.
- Keep small parts out of reach of children.
- Do not use this product if parts are missing, damaged or worn.
- This product is for domestic use only.
- This product should only be used on firm, level ground.

ASSEMBLY INSTRUCTIONS
PARTS SUPPLIED

REF	DESCRIPTION	ILLUSTRATION	QUANTITY	Assembly required
1	2 seat corner sofa	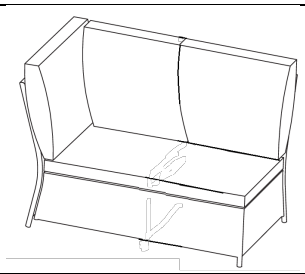	1	No
2	Bench	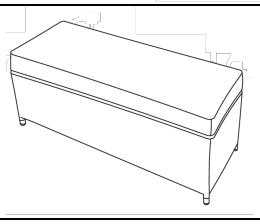	1	No

CARE INSTRUCTIONS

- To clean, wipe with a sponge and warm soapy water, then wipe with a dry, clean cloth. Do not use solvent-based cleaners or detergents as they can bleach or damage the product.
- Never use a pressure hose or washer to clean the product. Never use scourers, abrasives, or chemical cleaners.
- Please note, the cushions are **not** waterproof and **should not** be left out in the rain. Please store the cushions in a cool, dry place when not in use.
- If any liquid spills onto the rattan, clean it immediately with a damp cloth, and always refer to the care label.
- After rain or snowfall, wipe off excess water or snow, especially from flat surfaces. Allow air to ventilate to avoid moisture and mould.
- We recommend the use of a furniture cover when product not in use.
- To help maintain its appearance and avoid scratches, never place sharp pointed objects directly onto the surface.
- Due to the rattan being hand-woven, the weave may contain some colour and finishing variations. This is normal.
- To avoid damage to the rattan, be sure to pick the furniture up only by the frame, and never by the woven panels, to avoid damage/distortion to the product.
- Store the furniture in a cool, dry place. Ensure that the furniture is clean and dry before putting into storage. Do NOT put the product in a plastic or other non-permeable material as this creates moisture.
- Never drag furniture when moving it. Always lift it.
- Periodically check all fixings to ensure none have come loose and re-tighten when necessary.
- Never tilt the furniture. Ensure the furniture is always placed firmly on a solid, level surface.
- Please keep away from sources of extreme heat and naked flames.

The warranty does not cover accidental damage/neglect or general wear and tear.

CONTACT

CUSTOMER SERVICES - EMAIL: CUSTOMER.SERVICE@DOBBIES.COM. TELEPHONE NUMBER: 0131 561 6406 OR CONTACT YOUR LOCAL STORE.
DOBBIES GARDEN CENTRES LTD, MELVILLE NURSERY, LASSWADE, MIDLOTHIAN, EH18 1AZ