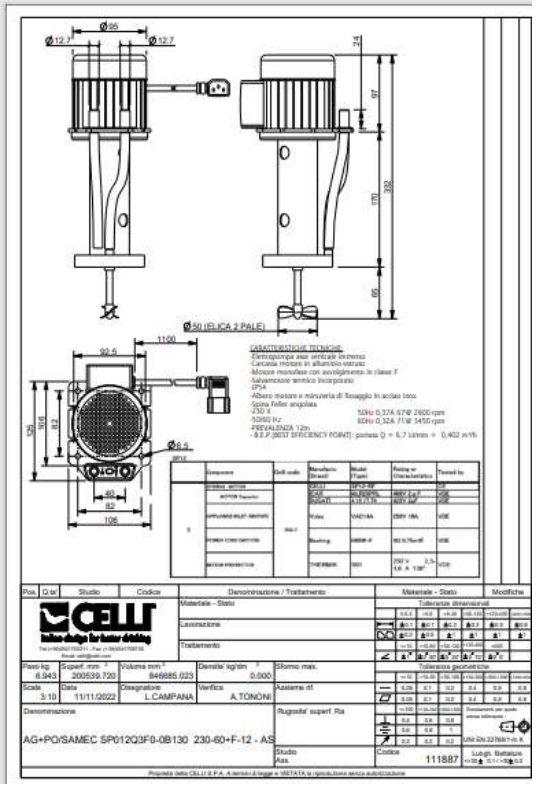

111887 AGITATOR PUMP /SAB-SP--230-60-F-12---J AS
34 PZ EURO 25

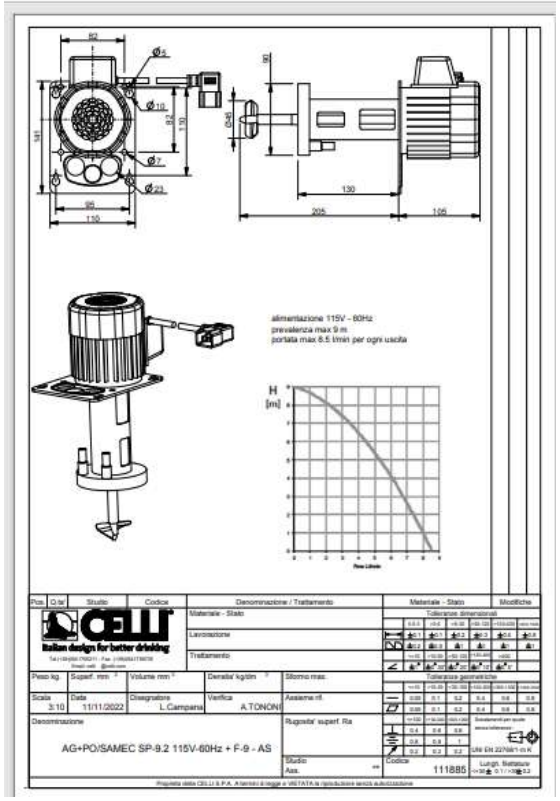

111885 AGITATING MOTOR SABER 9 MT - 115 VOLTS-60 HZ
118 PZ EURO 18