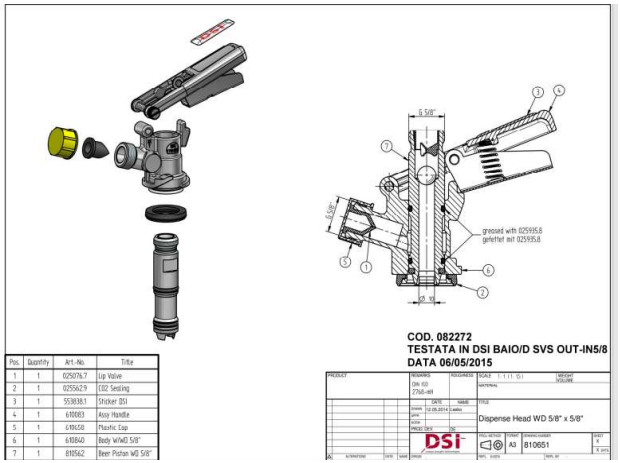

82272 DISPENSE HEAD D-TYPE-NO SAFETY VALVE 810651
378 PCS
EUR 10

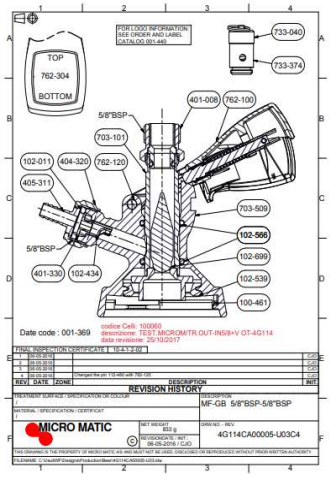

100060 G-TYPE MICROMATIC 5/8 CONNECTION
162 PCS
EURO 15

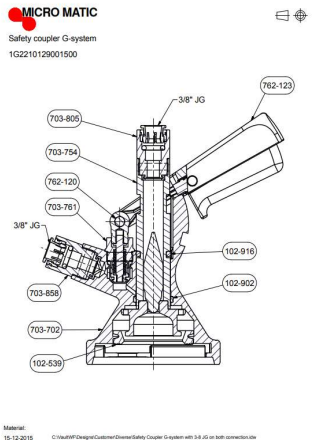

101147 MICROMATIC KEG HEAD MODEL G JG 3/8